EXPEDITION ONE
OFF-ROAD RESEARCH & EQUIPMENT

TOYOTA 4RUNNER 2025+

WINCH MOUNT



PLEASE READ ENTIRE GUIDE BEFORE INSTALLATION

Recommended that you read this entire install guide before installation. Check that all hardware is present before staring or scheduling an install. This guide is supplemental to mechanical knowledge and ability. Anyone not familiar with automotive installation should seek professional installation.

IMPORTANT INFO/FAQ

INSTALLATION HELP
Please review terms and conditions for details
Recommended purchaser review Welcome Guide at time of purchase for details

Care & Maintenance and Install Guides available at www.exp-one.com/resources

We do our best to offer timely assistance with your installation questions however as most of our team members are primarily engaged in the manufacturing process and packaging processes, we do not currently offer a tech for on-demand calls and inquiries. For the more technical installs or installs that are time-sensitive in nature, we would recommend our customers seek out the services of professional shops with experience specific to aftermarket bumpers.. We are happy to make recommendations to you on shops familiar with our products in your area. We do our best to respond to installation questions within 24-48 hours of contact as much as possible. Long-distance problem assessment can be difficult, so photos and videos are often required for us to best assist you. We highly recommend your initial contact regarding installation questions include both close-up and full photos, detailed descriptions using our part descriptions as much as possible, and video. This enables us to better assist without having the ability to see the install difficulties directly and assist you as quickly as possible.

NOTE
Expedition One does not guarantee fitment with other aftermarket products, or reinstallation of take off OEM parts.

Expedition One is NOT RESPONSIBLE for damage to paint or powder coating, items assembled in error during installation or costs associated with install, and injury.
OEM manufacture model refreshes/updates, factory build location and suppliers may cause variations in fitment or installation and can not be verified, vehicle to vehicle .

EXPEDITION ONE
113 N. 700 W. BUILDING 5C BAY 1
OGDEN, UT 84404
INFO@EXPEDITIONONE.BIZ
801-627-2921 MON-FRI 0900-1700 MST

INSTALL LEVEL 

1 STAR	★	EASY - No tools required
2 STARS	★★	BASIC - Requires standard tools, basic mechanical knowledge and understanding
3 STARS	★★★	MODERATE - Requires standard tools. Some drilling and/or cutting.
4 STARS	★★★★	ADVANCED - Requires speciality tools. Drilling, cutting, and grinding required
5 STARS	★★★★★	EXPERT - Professional installation recommended.

We always recommend professional assistance when installing our vehicle products. Always follow safety precautions including the use of safety gear and devices.

IMPORTANT INFO/FAQ

WINCHES

We use the most common bolt patterning but cannot guarantee your particular winch will fit. Because there are so many different brands on the market for winches, we typically recommend you wait until you have your bumper in-hand and ideally even installed to have specific measurements for best fit for your particular application. Integrated and Non-Integrated solenoid fitment varies by vehicle, model, and engine. Non-integrated solenoids will need to be relocated to an open location with in the bumper, engine bay, or other open location. We DO NOT provide mounts or instruction for relocation of the solenoid. Most bumpers use a foot forward mount and will require the winch to be clocked (see winch manufacture for details). Winch plates or direct mounting locations will be provided with the bumper, see install guide for details. See winch manufacture for hardware, associated parts, or fairleads. . We DO NOT manufacture the winch, provided wiring, or instructions on how to connect to the vehicles power. Seek professional installation on hybrid or electric vehicles

AFTERMARKET or OEM PRODUCTS

We DO NOT guarantee fitment or installation of any aftermarket, third party or OEM parts, accessories, or hardware. This includes items such as lighting, winches, skids, lifts, suspension, and accessory mounts. Access to all brands, manufactures and country of origin specific parts is limited or impossible during the product development stage and subsequent new or modified revisions of said products including OEM design changes or refreshes. It is recommended you have the product in hand and installed before modifying with other aftermarket parts. Consult other sources to gain any first hand knowledge of other products others have installed.

IMPORTANT INFO/FAQ

HARDWARE

Please review for details and installation. Figures or data may vary. Leave all accessible hardware loose for installation and tighten all hardware after everything is installed on the vehicle. Check and tighten all hardware after the first 100 miles and/or after off roading**.**

Some hardware locations do not require being tightened to spec due to there design, location or material attachment (including rubber, plastic, and aluminum). Over tightening may break or damage parts. Torque spec may vary, amounts listed are generic.

HARDWARE		TORQUE SPEC	
SIZE	SOCKET	GR5 / 8.8	GR8 / 10.9
#8	1/4"	X	
#10	5/16”		
1/4"	7/16”	6-8	9-10
5/16”	1/2"	13-14	18-20
3/8”	9/16”	23-26	33-37
7/16”	5/8”	37-41	52-58
1/2"	3/4"	57-64	80-90
9/16”	13/16”	82-91	115-129
5/8”	15/16”	112-118	159-180
3/4"	1-1/8”	200-223	282-315
1”	36MM	X	
M6	10MM	9-10	13-15
M8	13MM	22-24	32-35
M10	15MM	44-49	64-72
M12	18MM	76-83	112-123
M14	21MM	102-112	165



GRADE 5



CLASS 8.8

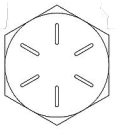

GRADE 8

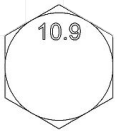

CLASS 10.9

TYPES OF HARDWARE		
		
HEX CAP BOLT	WASHER	NYLOC NUT
		
BUTTON HEAD BOLT	FENDER WASHER	HEX NUT
		
CARRIAGE BOLT	INTERNAL TOOTH	JAM NUT
		
SOCKET CAP BOLT	CLIP NUT	ACORN NUT
		
FLAT HEAD SCREW	RIVET NUT	COUPLING

NOTE

Extra hardware may be left over due to model or option specific items that may not be required for the install. OEM hardware may vary in style or socket size from shown.

TIGHTEN ALL HARDWARE AFTER EVERYTHING IS INSTALLED ON THE VEHICLE. CHECK AND TIGHTEN ALL HARDWARE AFTER THE FIRST 100 MILES AND AFTER OFF ROADING. CHECK REGULARLY

HARDWARE

5/16" - 18 X 2" BUTTON HEAD	2
5/16" - 18 CLIP NUT	2
5/16" WASHER	2
3/8" - 16 X 1" BUTTON HEAD	2
3/8" - 16 X 1-1/4" HEX CAP	16
3/8" - 16 NYLOC NUT	16
3/8" - 16 CLIP NUT	2
3/8" WASHER	32
1/2" - 13 X 1-1/4" HEX CAP	8
1/2" - 13 X 4" HEX CAP	2
1/2" - 13 NYLOC NUT	2
1/2" WASHER	12
DOG BONE NUT RETAINER	4
OVAL SPACER	6

WINCH MOUNT	1

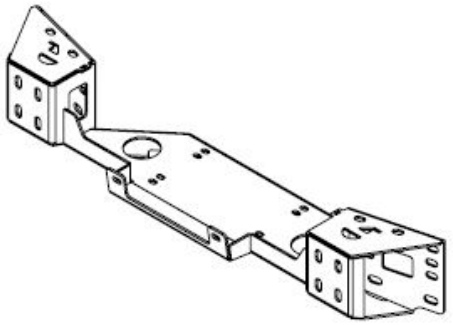

FRAME MOUNT INNER	2

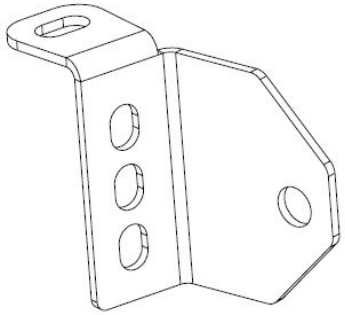

FRAME MOUNT OUTER	2

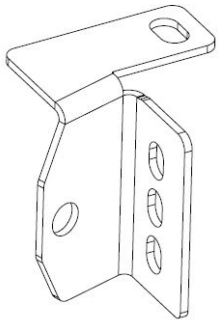

FRAME SPACER	2

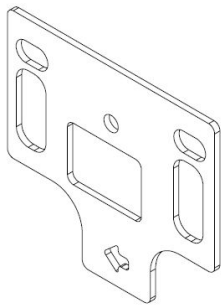

1 – BUMPER REMOVAL

Remove the entire front fascia as shown from fenders, under the hood, and underneath. Disconnect all wiring, lights and sensors. Check for any other connections or hardware before removing the bumper. Save hardware for reinstallation.











2 – INTERNALS REMOVAL

Remove the grille brace. Undo the clips hold the bumper to the shroud as shown. Remove the cross frame by unbolting the assembly at the frame and bumper side wings (located behind the arrow below). Save hardware for reuse.

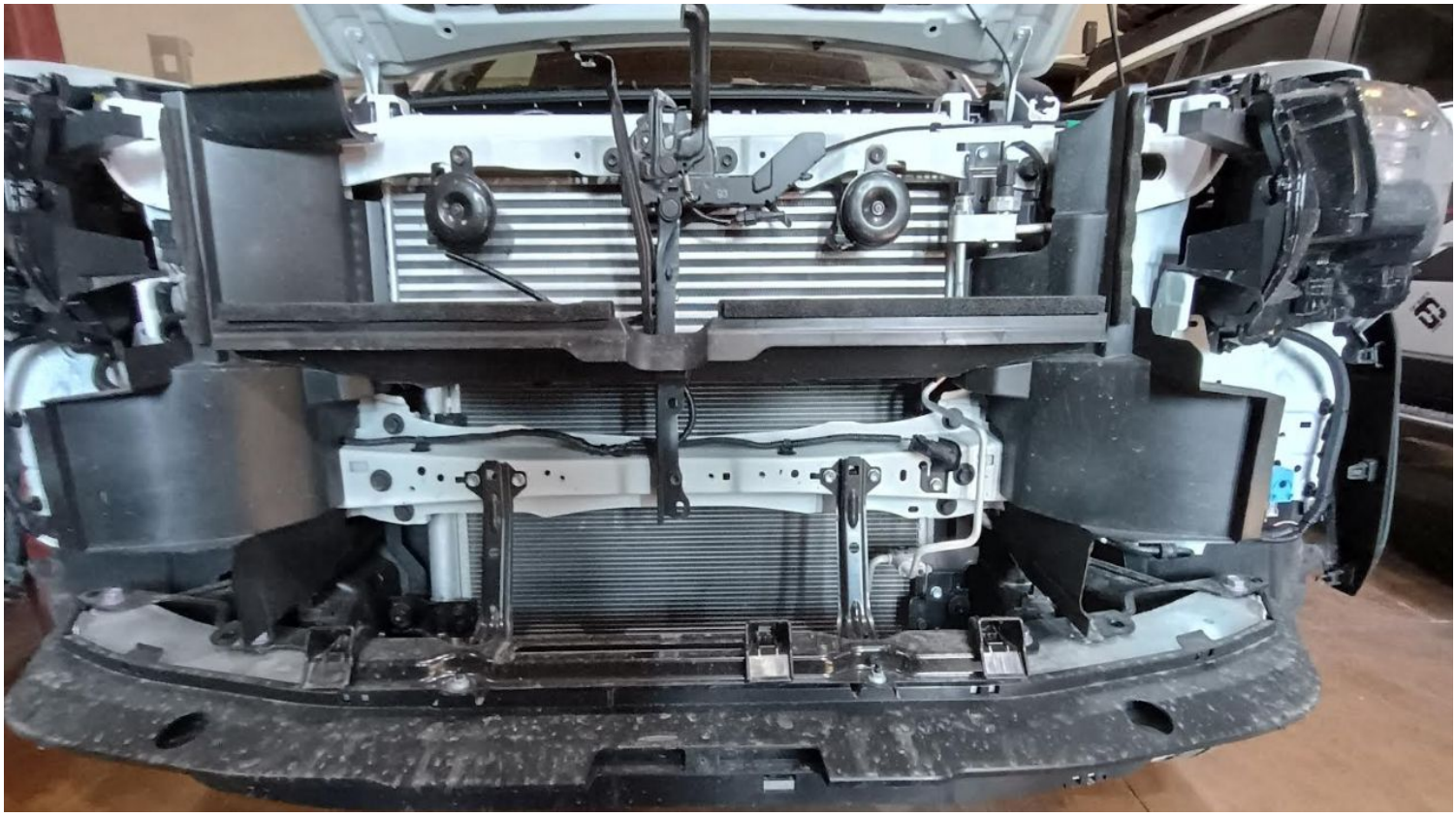

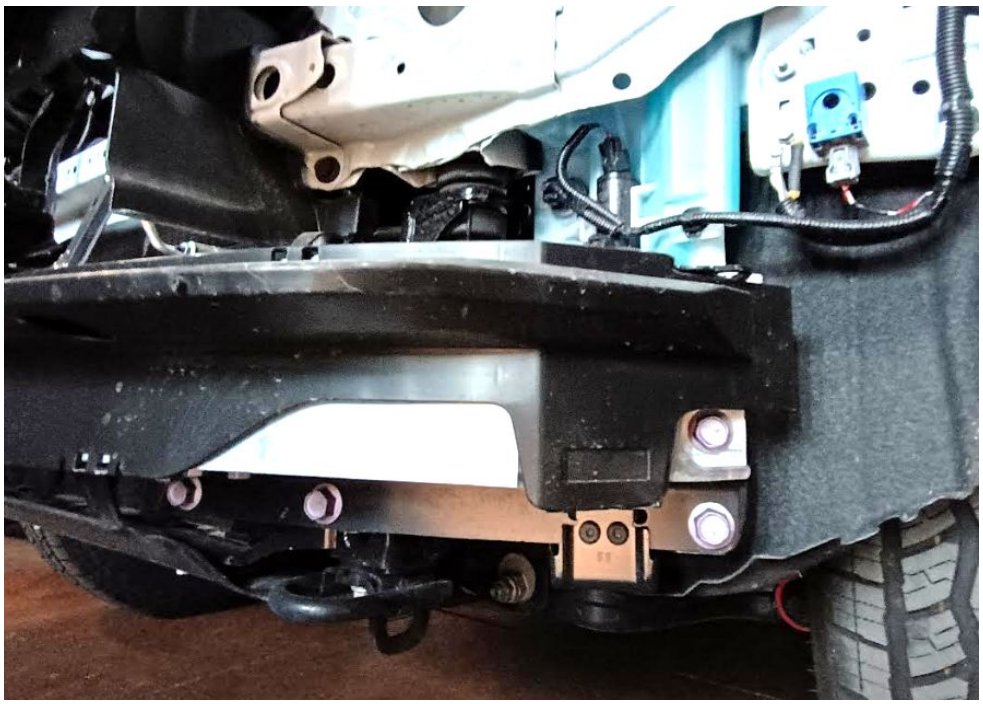



3 – REINFORCEMENT BRACKET INSTALLATION

Attach the provided reinforcement brackets using 1/2” hardware tab Leave hardware loose for adjustment.









1/2" - 13 X 4" HEX CAP	2
1/2" - 13 NYLOC NUT	2
1/2" WASHER	4

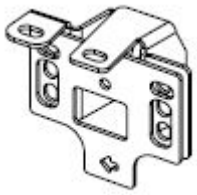

Place the provided space mount into the frame end as shown. Use the provided spacers on the outside edges when mounting the winch mount in the next step.





4 – REINFORCEMENT BRACKET INSTALLATION

Attach the provided reinforcement brackets using 3/8” hardware tab Leave hardware loose for adjustment.

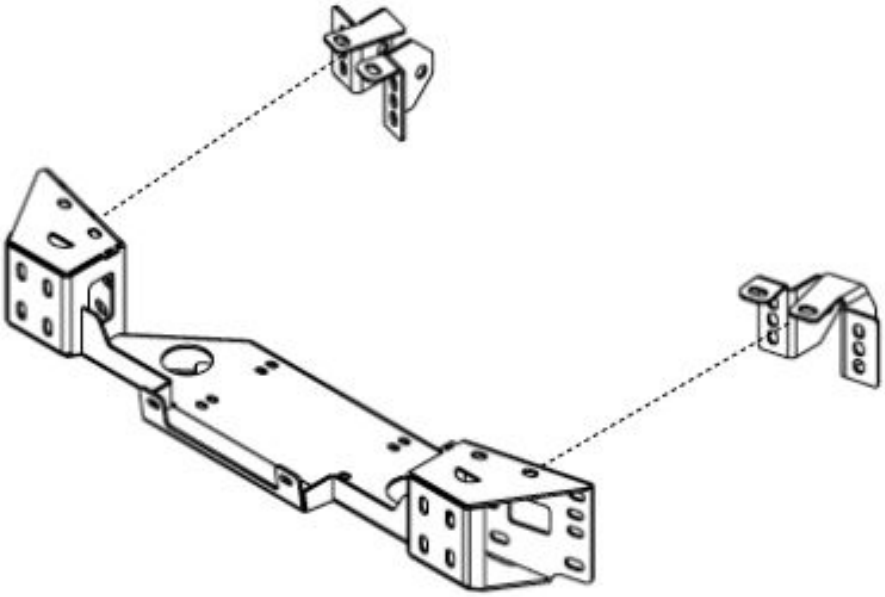



EXAMPLE SHOWN

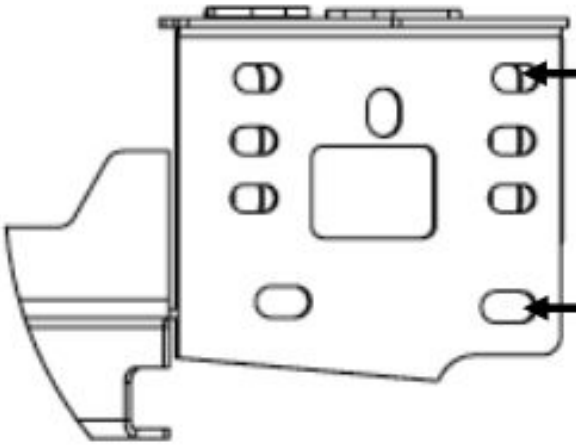

3/8" - 16 X 1-1/4" HEX CAP	12
3/8" - 16 NYLOC NUT	12
3/8" WASHER	24

OEM HARDWARE	4

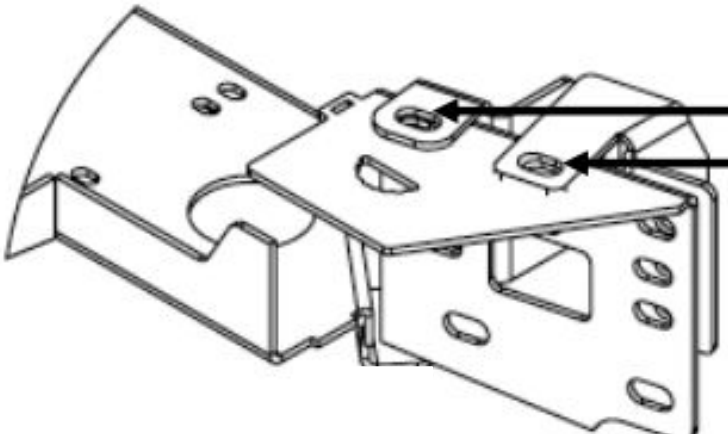

3/8" - 16 X 1-1/4" HEX CAP	4
3/8" - 16 NYLOC NUT	4
3/8" WASHER	8

3/8" - 16 CLIP NUT	2

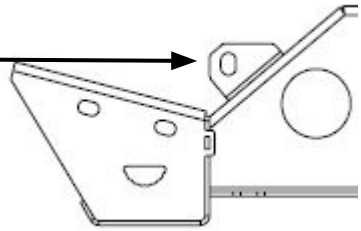

5 – WINCH INSTALLATION

Mount the winch at this time using the winch manufacturer provided hardware. This will mount directly to the winch mount. Adjust as needed. see winch section for details. Skip if no winch is to be installed. Some trimming or removal of cross frame tabs or mounts may be required. Check fitment again once OEM bumper trimming and grille shutter are relocated before mounting the bumper

6 – LOWER PANEL REMOVAL

Remove the lower fascia piece from the front bumper and reinstall on the vehicle by uncliping/bolting from the back. Reinstall the FOG light cover piece after trimming in the next step.







7 – OEM BUMPER TRIMMING

Mark the location below as shown and cut the opening for mounting. Recommend that you test fit the front of the winch mount to check for clearances. Variations in the vehicle may require some extra trimming.



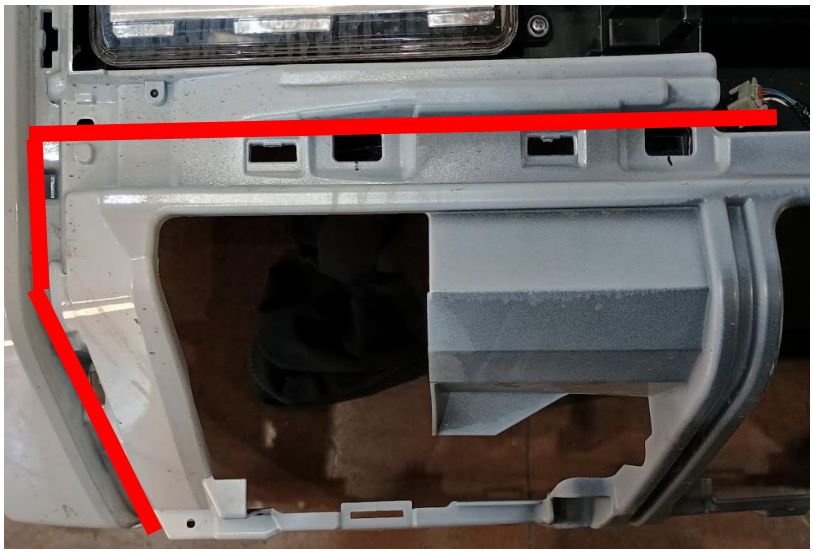





8 – WINCH MOUNT ATTACHMENT

Mount the winch mount to the internal mount. Attach using the provided 1/2” hardware and nut retainers. Adjust as needed and tighten.

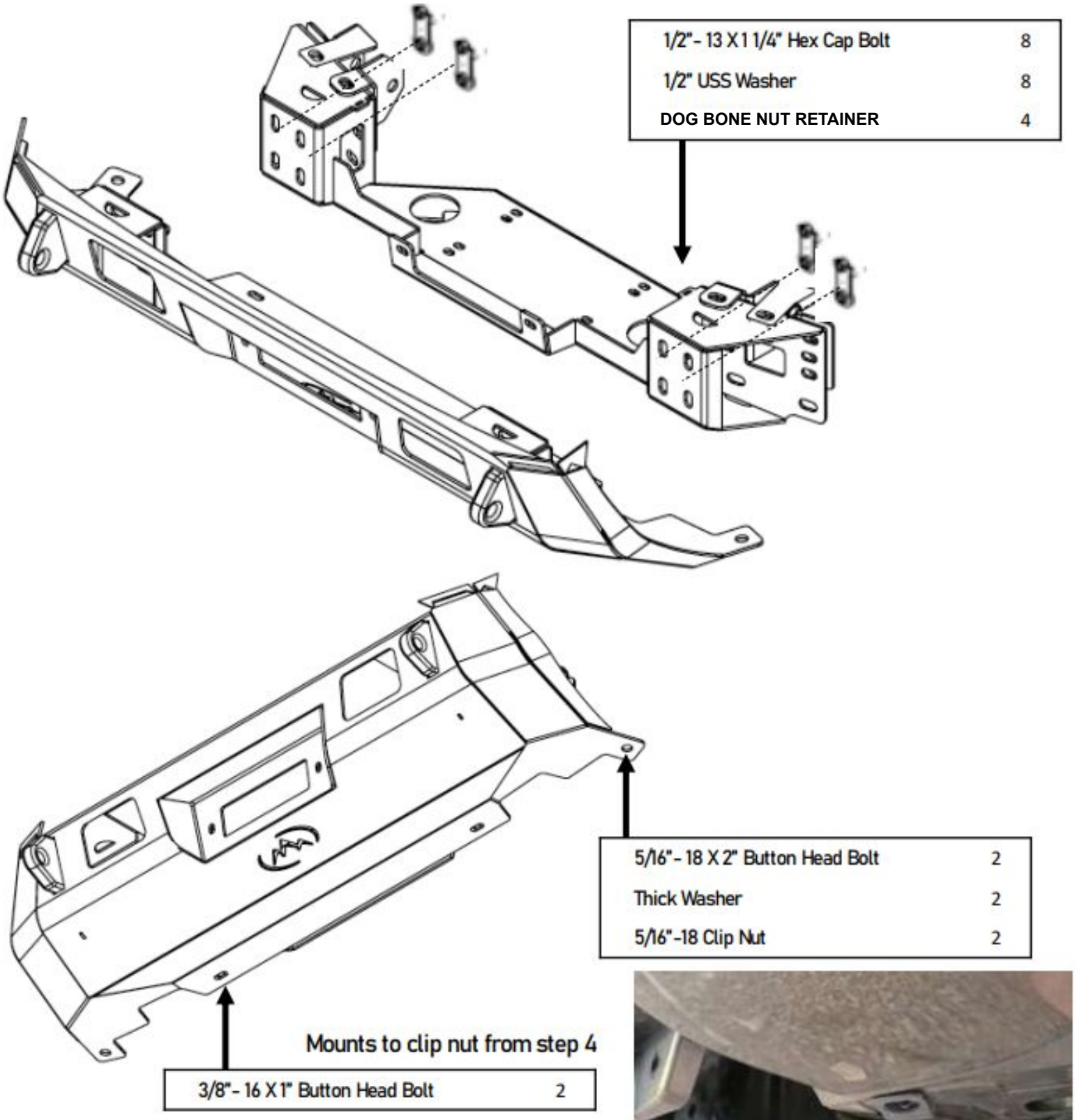

Tie in the side locations to the fender liner or underside with the provided 5/16 hardware..

9 – TIGHTEN HARDWARE

Check that all hardware is tightened including all brackets and mounting locations. Reconnect the parking sensor wiring harness and other connections to the vehicles electronics and secure all loose wiring. Check that everything is working and adjust if needed before driving on the road.

TIGHTEN ALL HARDWARE AFTER EVERYTHING IS INSTALLED ON THE VEHICLE. CHECK AND RETIGHTEN ALL HARDWARE AFTER THE FIRST 100 MILES AND AFTER OFF ROADING. CHECK REGULARLY AFTER EXTENDED OFFROAD USE