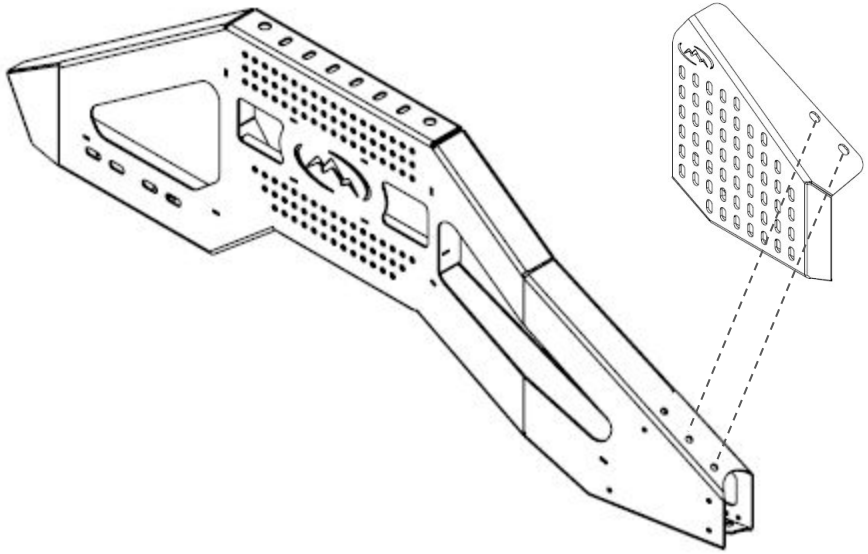

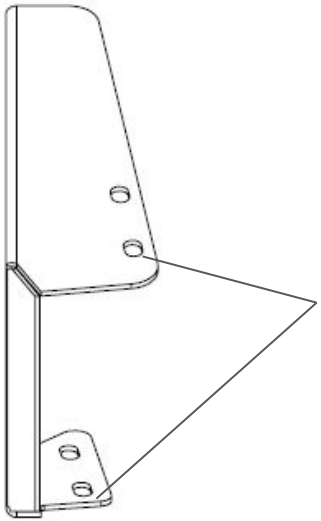

4x - ⅜ Button Head
4x - ⅜ Washer
4x - ⅜ Nyloc

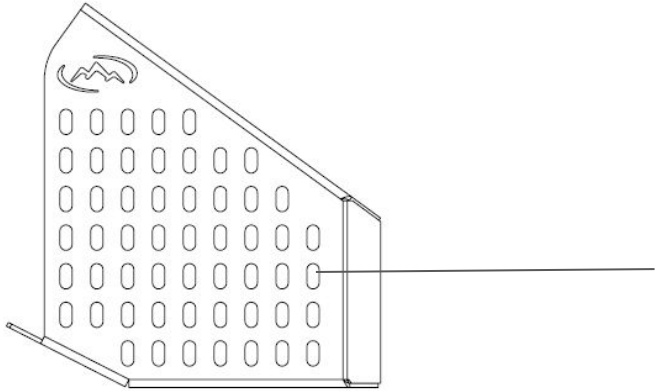

Mount Accessory

