EXPEDITION ONE
OFF-ROAD RESEARCH & EQUIPMENT

TOYOTA LC 250 2024+

REAR BUMPER



PLEASE READ ENTIRE GUIDE BEFORE INSTALLATION

Recommended that you read this entire install guide before installation. Check that all hardware is present before staring or scheduling an install. This guide is supplemental to mechanical knowledge and ability. Anyone not familiar with automotive installation should seek professional installation.

IMPORTANT INFO/FAQ

INSTALLATION HELP
Please review terms and conditions for details
Recommended purchaser review Welcome Guide at time of purchase for details

Care & Maintenance and Install Guides available at www.exp-one.com/resources

We do our best to offer timely assistance with your installation questions however as most of our team members are primarily engaged in the manufacturing process and packaging processes, we do not currently offer a tech for on-demand calls and inquiries. For the more technical installs or installs that are time-sensitive in nature, we would recommend our customers seek out the services of professional shops with experience specific to aftermarket bumpers.. We are happy to make recommendations to you on shops familiar with our products in your area. We do our best to respond to installation questions within 24-48 hours of contact as much as possible. Long-distance problem assessment can be difficult, so photos and videos are often required for us to best assist you. We highly recommend your initial contact regarding installation questions include both close-up and full photos, detailed descriptions using our part descriptions as much as possible, and video. This enables us to better assist without having the ability to see the install difficulties directly and assist you as quickly as possible.

NOTE
Expedition One does not guarantee fitment with other aftermarket products, or reinstallation of take off OEM parts.

Expedition One is NOT RESPONSIBLE for damage to paint or powder coating, items assembled in error during installation or costs associated with install, and injury.
OEM manufacture model refreshes/updates, factory build location and suppliers may cause variations in fitment or installation and can not be verified, vehicle to vehicle .

EXPEDITION ONE
113 N. 700 W. BUILDING 5C BAY 1
OGDEN, UT 84404
INFO@EXPEDITIONONE.BIZ
801-627-2921 MON-FRI 0900-1700 MST

INSTALL LEVEL ☆☆☆☆

1 STAR ★	EASY - No tools required
2 STARS ★★	BASIC - Requires standard tools, basic mechanical knowledge and understanding
3 STARS ★★★	MODERATE - Requires standard tools. Some drilling and/or cutting.
4 STARS ★★★★	ADVANCED - Requires speciality tools. Drilling, cutting, and grinding required
5 STARS ★★★★★	EXPERT - Professional installation recommended.

We always recommend professional assistance when installing our vehicle products. Always follow safety precautions including the use of safety gear and devices.

IMPORTANT INFO/FAQ

LIGHT PORTS + LIGHT BARS

To give you a wide range of options from various brands and designs, the light ports were designed to be as universal as possible. Not all mounts or designs will fit exactly and may require the use of shims, spacers, removal of housings or covers, different light manufacture mounts or hardware to mount. Reuse of OEM light is limited to select bumpers and will come with provided hardware to reinstall. Specific mounts or options if available will be listed at time of purchase and provided with hardware. Bolt-on light ports or mounts will mount as per the instructions. It is recommended that lights be purchased with the bumper in hand to gain the best fitment. We DO NOT manufacture the lights, provided wiring, or instructions on how to connect to the OEM harness. Seek professional installation on hybrid or electric vehicles

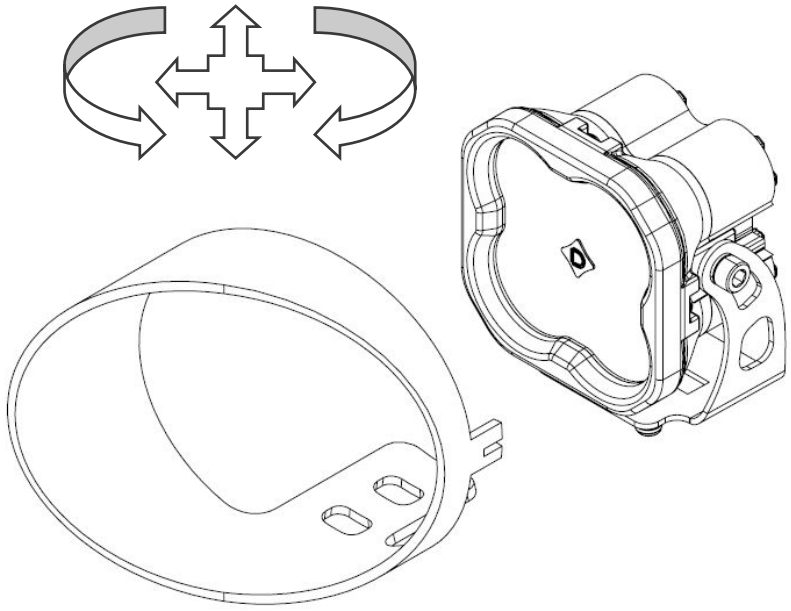

EXAMPLE SHOWN - LIGHT PORTS WILL VARY

AFTERMARKET or OEM PRODUCTS

We DO NOT guarantee fitment or installation of any aftermarket, third party or OEM parts, accessories, or hardware. This includes items such as lighting, winches, skids, lifts, suspension, and accessory mounts. Access to all brands, manufactures and country of origin specific parts is limited or impossible during the product development stage and subsequent new or modified revisions of said products including OEM design changes or refreshes. It is recommended you have the product in hand and installed before modifying with other aftermarket parts. Consult other sources to gain any first hand knowledge of other products others have installed.

EXAMPLES

The illustrations, diagrams, and examples shown in this guide are provided for reference purposes only. Actual installations may vary depending on model, configuration, or product updates. Drawings, visuals, and component layouts may differ from what is shown, but the installation principles and procedures remain the same.

USE IN CONJUNCTION WITH DSTC ARM SYSTEMS GUIDE

Swing arm specific items feature a separate guide related to the installation of arms and common features.Review these guides for any pre planning or items that will need to be installed or in conjunction with the bumper install. Items listed below that may have limited access once installed on the vehicle.

- Tread Plate
- Pin Plates
- Kickplate Assemblies

IMPORTANT INFO/FAQ

HARDWARE

Please review for details and installation. Figures or data may vary. Leave all accessible hardware loose for installation and tighten all hardware after everything is installed on the vehicle. Check and tighten all hardware after the first 100 miles and/or after off roading**.**

Some hardware locations do not require being tightened to spec due to there design, location or material attachment (including rubber, plastic, and aluminum). Over tightening may break or damage parts. Torque spec may vary, amounts listed are generic.

HARDWARE		TORQUE SPEC	
SIZE	SOCKET	GR5 / 8.8	GR8 / 10.9
#8	1/4"	X	
#10	5/16”		
1/4"	7/16”	6-8	9-10
5/16”	1/2"	13-14	18-20
3/8”	9/16”	23-26	33-37
7/16”	5/8”	37-41	52-58
1/2"	3/4"	57-64	80-90
9/16”	13/16”	82-91	115-129
5/8”	15/16”	112-118	159-180
3/4"	1-1/8”	200-223	282-315
1”	36MM	X	
M6	10MM	9-10	13-15
M8	13MM	22-24	32-35
M10	15MM	44-49	64-72
M12	18MM	76-83	112-123
M14	21MM	102-112	165



GRADE 5



CLASS 8.8

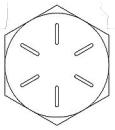

GRADE 8

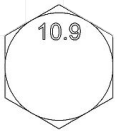

CLASS 10.9

TYPES OF HARDWARE		
		
HEX CAP BOLT	WASHER	NYLOC NUT
		
BUTTON HEAD BOLT	FENDER WASHER	HEX NUT
		
CARRIAGE BOLT	INTERNAL TOOTH	JAM NUT
		
SOCKET CAP BOLT	CLIP NUT	ACORN NUT
		
FLAT HEAD SCREW	RIVET NUT	COUPLING

NOTE

Extra hardware may be left over due to model or option specific items that may not be required for the install. OEM hardware may vary in style or socket size from shown.

TIGHTEN ALL HARDWARE AFTER EVERYTHING IS INSTALLED ON THE VEHICLE. CHECK AND TIGHTEN ALL HARDWARE AFTER THE FIRST 100 MILES AND AFTER OFF ROADING. CHECK REGULARLY

HARDWARE

1/4” – 20 X 1/2“ BUTTON HEAD	2
1/4” – 20 X 3/4“ BUTTON HEAD	20
1/4” – 20 X 1 1/4“ HEX CAP	4
1/4” – 20 NYLOC NUT	24
1/4” – 20 FLAT CLIP NUT	4
1/4" WASHER	8
5/16" - 18 X 1" CARRIAGE	2
5/16" - 18 NYLOC NUT	2
5/16" WASHER	2
3/8" - 16 X 1" BUTTON HEAD	4
3/8" - 16 X 3" BUTTON HEAD	2
3/8" - 16 NYLOC NUT	4
3/8" - 16 CLIP NUT	2
3/8" WASHER	4
1/2" - 13 X 1-1/4" HEX CAP	2
1/2" - 13 X 1-1/2" HEX CAP	10
1/2" - 13 X 5 1/2" HEX CAP	2
1/2" - 13 X 6" HEX CAP	2
1/2" - 13 X 1” CARRIAGE	6
1/2" - 13 NYLOC NUT	20
1/2" WASHER	38
3 HOLE CARRIAGE RETAINER	2
BENT RETAINER NUT	2
SENSOR BEZELS	4
SENSOR COVERS	4

HARDWARE

LOWER FRAME MOUNT	2

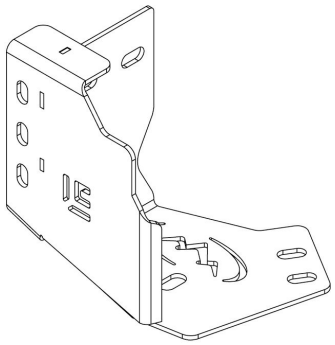

UPPER FRAME MOUNT	2

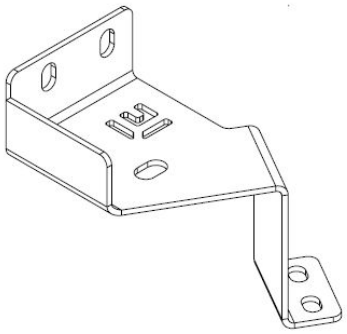

OUTER WING MOUNT	2

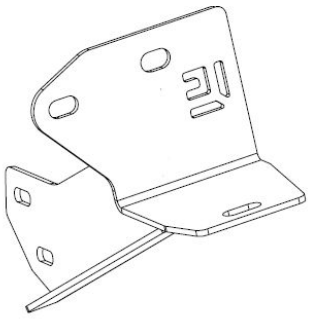

INNER WING MOUNT	2

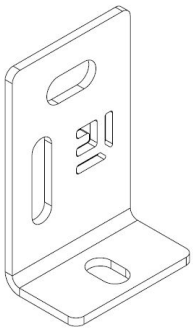

HITCH COVER	1

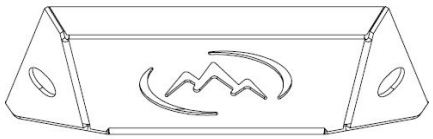

TREAD PLATE	2

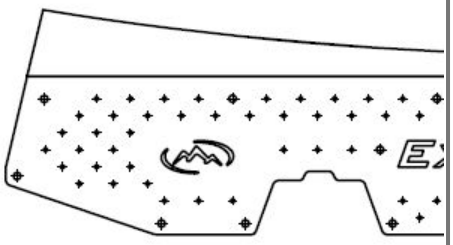

DSTC SHOWN

LIGHT TAB 1	2

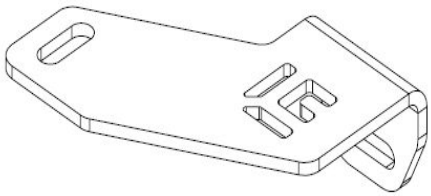

LIGHT TAB 2	2

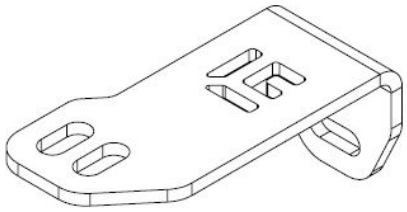

SENSOR BASE	2

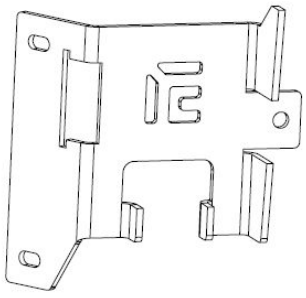

SENSOR BASE CLAMP	1

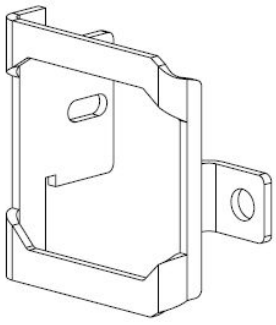

SENSOR TAB	2

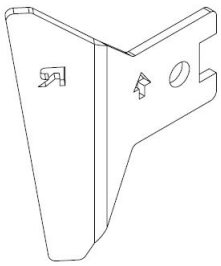

1 – REMOVE OEM BUMPER

Remove the rear bumper OEM hardware from the wheel wells on each side of the vehicle. Extra locations underneath will need to be unbolted. Additional locations in the rear liftgate opening will need to be undone along with removing the plastic tread plate and Flex the fender trim (or completely remove the trim) for bumper removal, access and installation. Undo the sensors and any wire loom connections. Remove the bumper by pulling it away from the corner near the wheel wells. Disconnect the parking sensors from the bezels. Be care to not break any clips or parts of the bezel as they will be reused in the new bumper. Remove the bezels and wiring harness once the bumper is off















2 – OEM BUMPER TRIMMING

Trim the OEM bumper side pieces as shown for clearance





Trim the to the edge, leave enough for the upright trim piece to still be attached.

Continue to follow the trim along the door opening. At the corner shown continue straight across to the edge and down.



Measure 10” down from the top edge of the plastic trim. Cut a parallel line across at this point and cut straight across

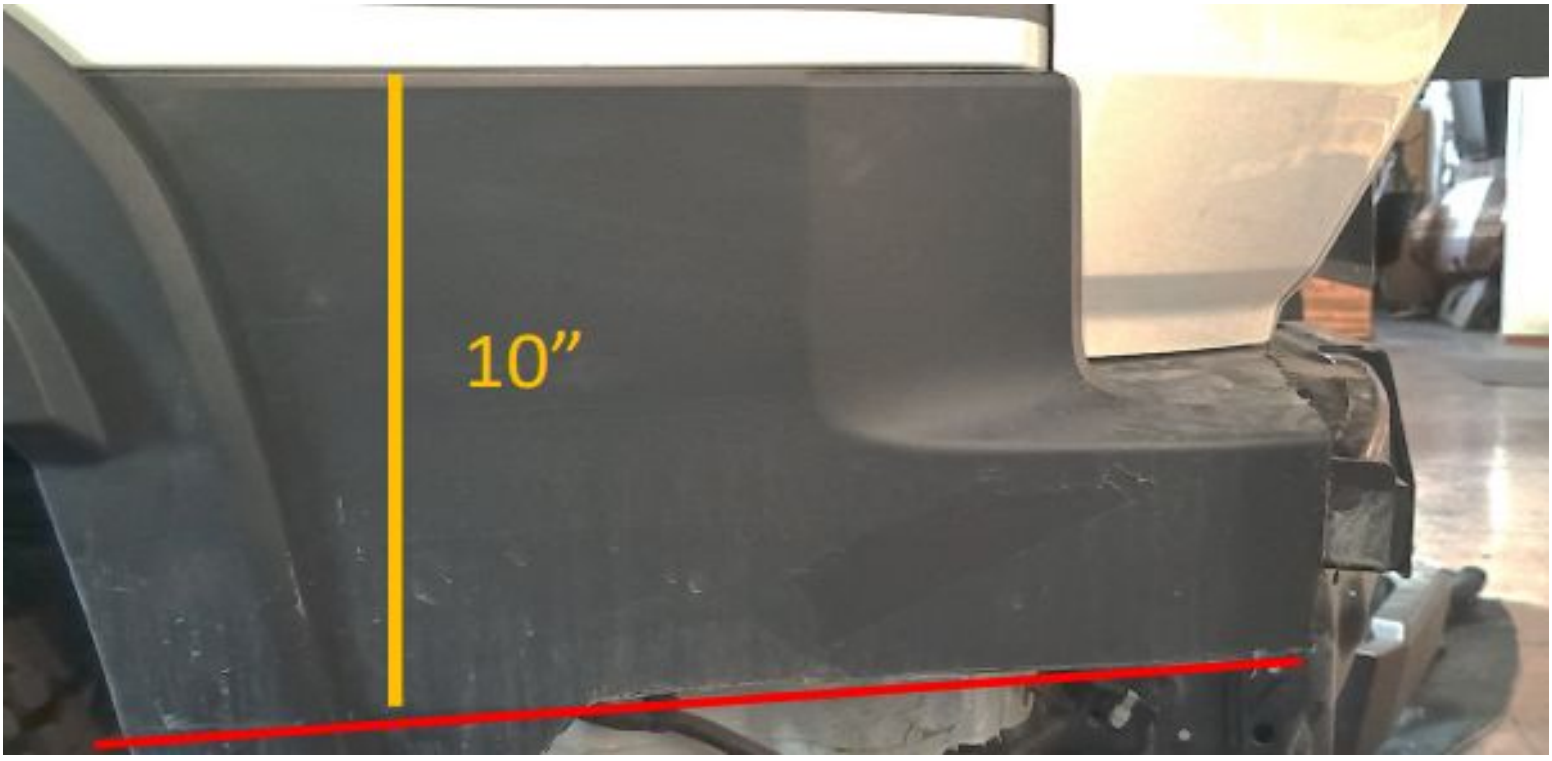

3 – TREAD PLATE INSTALLATION / DSTC KITS

Attach the tread plate to the bumper using the provided 1/4” hardware tread packs. Tighten all tread hardware in preparation of bumper mounting. DSTC orders see DSTC install guide for pin plates and kick plate and install at this time.

4 – SENSOR MOUNTS AND WIRE LOOM

Place the sensor on the mount as shown and secure in place with the cover and holder tab. Secure with 1/4” bolts and clipnuts. Insert the plastic side sensor covers into their positions inside the bumper. Once the covers are in place, mount the side sensors mounts with the included 1/4" bolts and nuts. Ensure sensors match original sides (IE - driver side to driver side). Make sure it is pressing the cover in place and adjust as needed. Weave the wire loom through the bumper avoiding mount locations and secure in place. Reconnect the sensors to the loom. When using the provided replacement rubber bezels use WD40 and align the edge directional to the pointed surface when fitting. Secure the wiring loom.

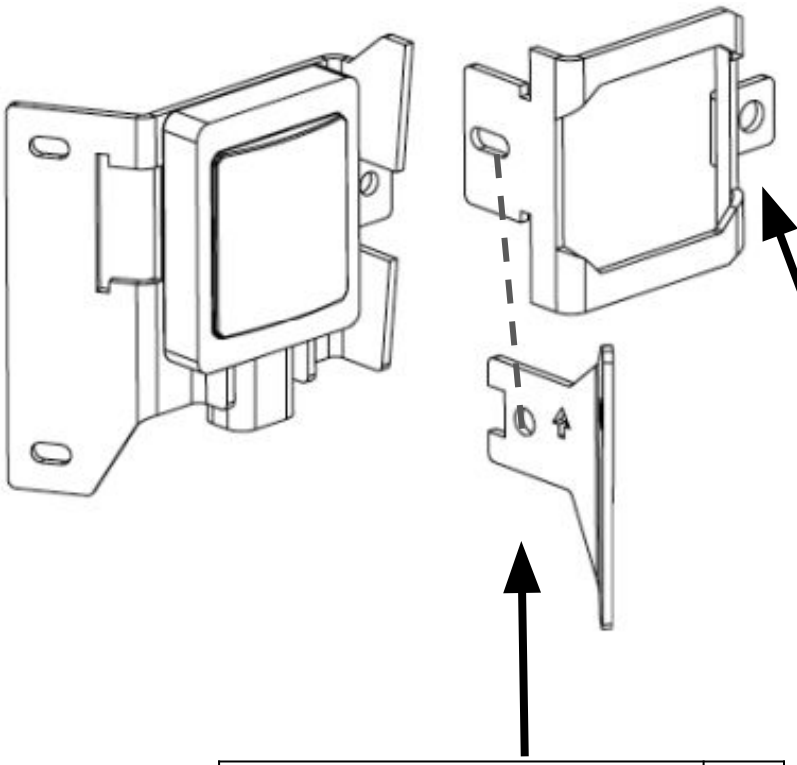



1/4” – 20 X 1/2“ BUTTON HEAD	2
1/4” – 20 FLAT CLIP NUT	2

1/4” – 20 X 1/2“ BUTTON HEAD	2
1/4” – 20 FLAT CLIP NUT	2

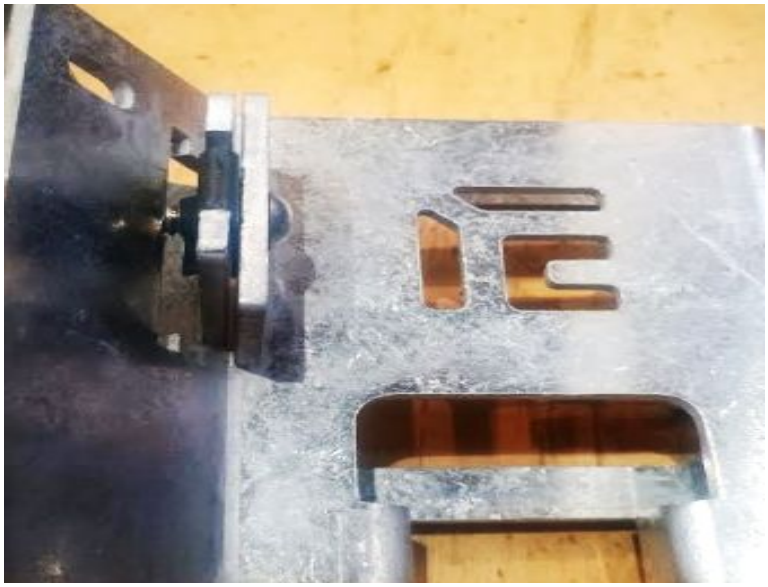



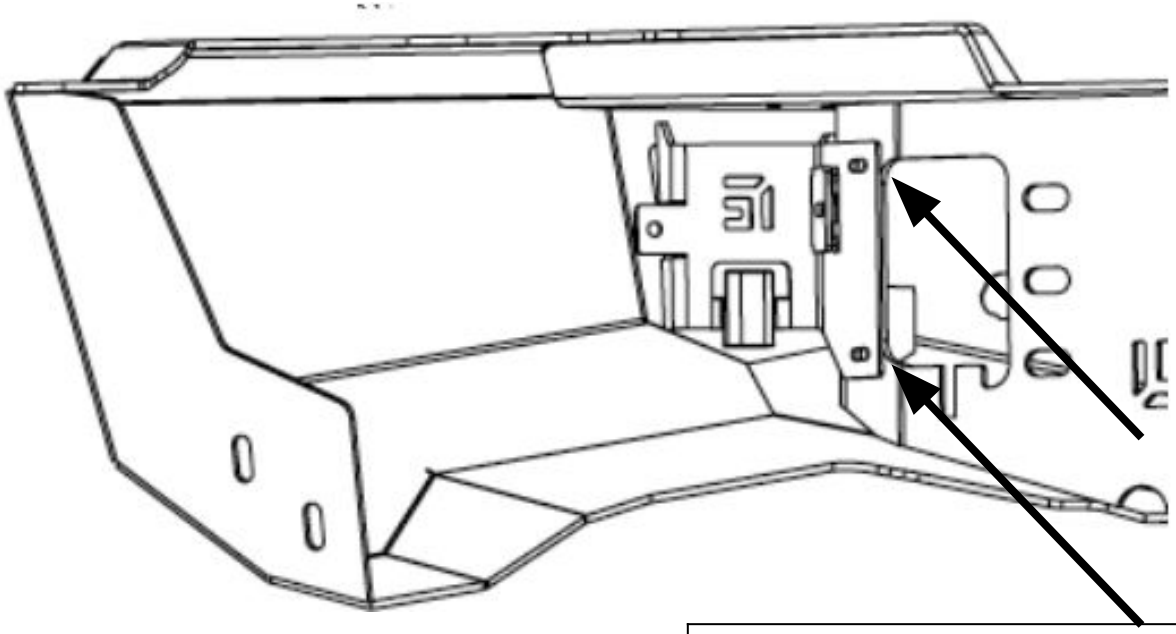

1/4” – 20 X 1 1/4“ HEX CAP	4
1/4” – 20 NYLOC NUT	4
1/4" WASHER	8

5 – BRACKET INSTALLATION

Attach both mounting brackets as shown to the ends of the rear cross member. Mount using the provided 1/2” hardware. Leave all hardware loose for adjustment and tighten once in place. 6” bolts will mount thru the frame openings

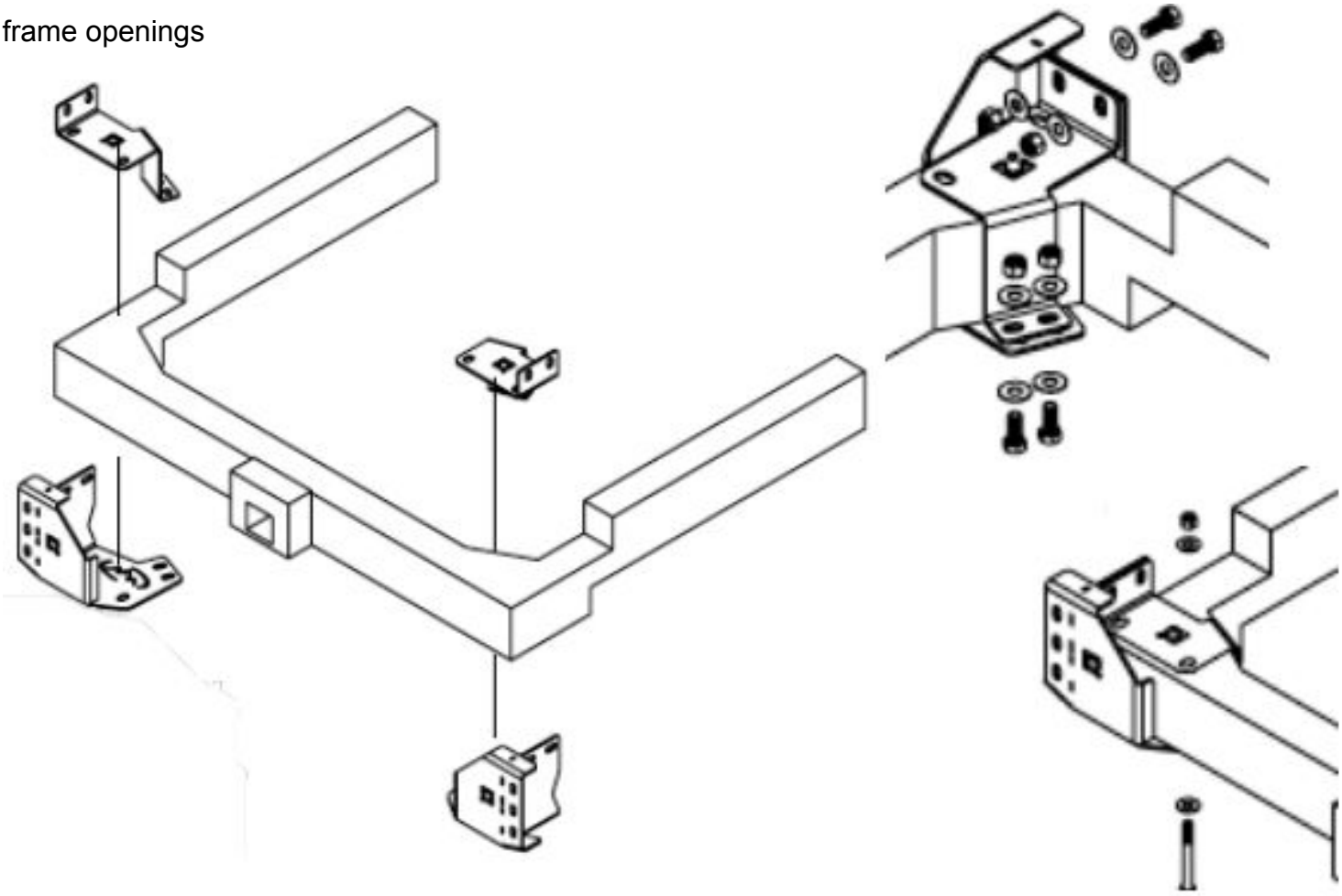

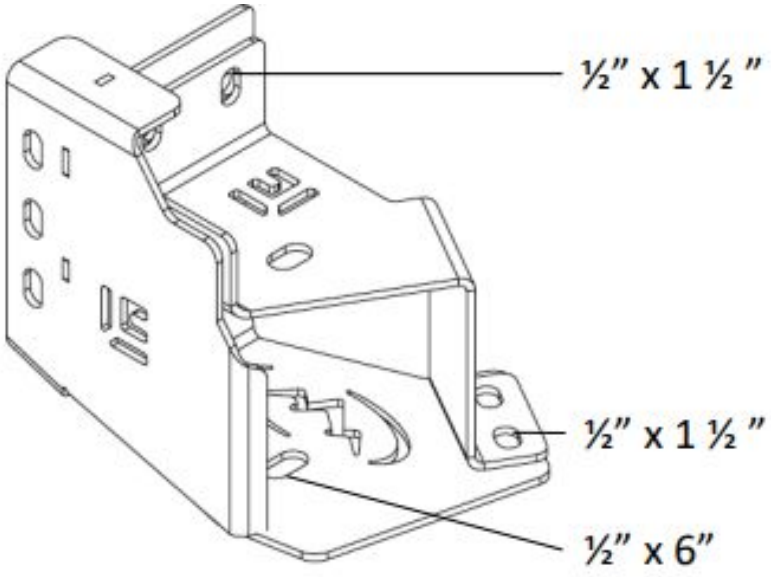



1/2" - 13 X 1-1/2" HEX CAP	8
1/2" - 13 X 6" HEX CAP	2
1/2" - 13 NYLOC NUT	10
1/2" WASHER	20

6 – BUMPER MOUNTING

Mount the bumper as shown using the provided 1/2“ hardware. Center the bumper with the vehicle and align gaps between the body and bumper as needed.. Leave all hardware loose for adjustment.

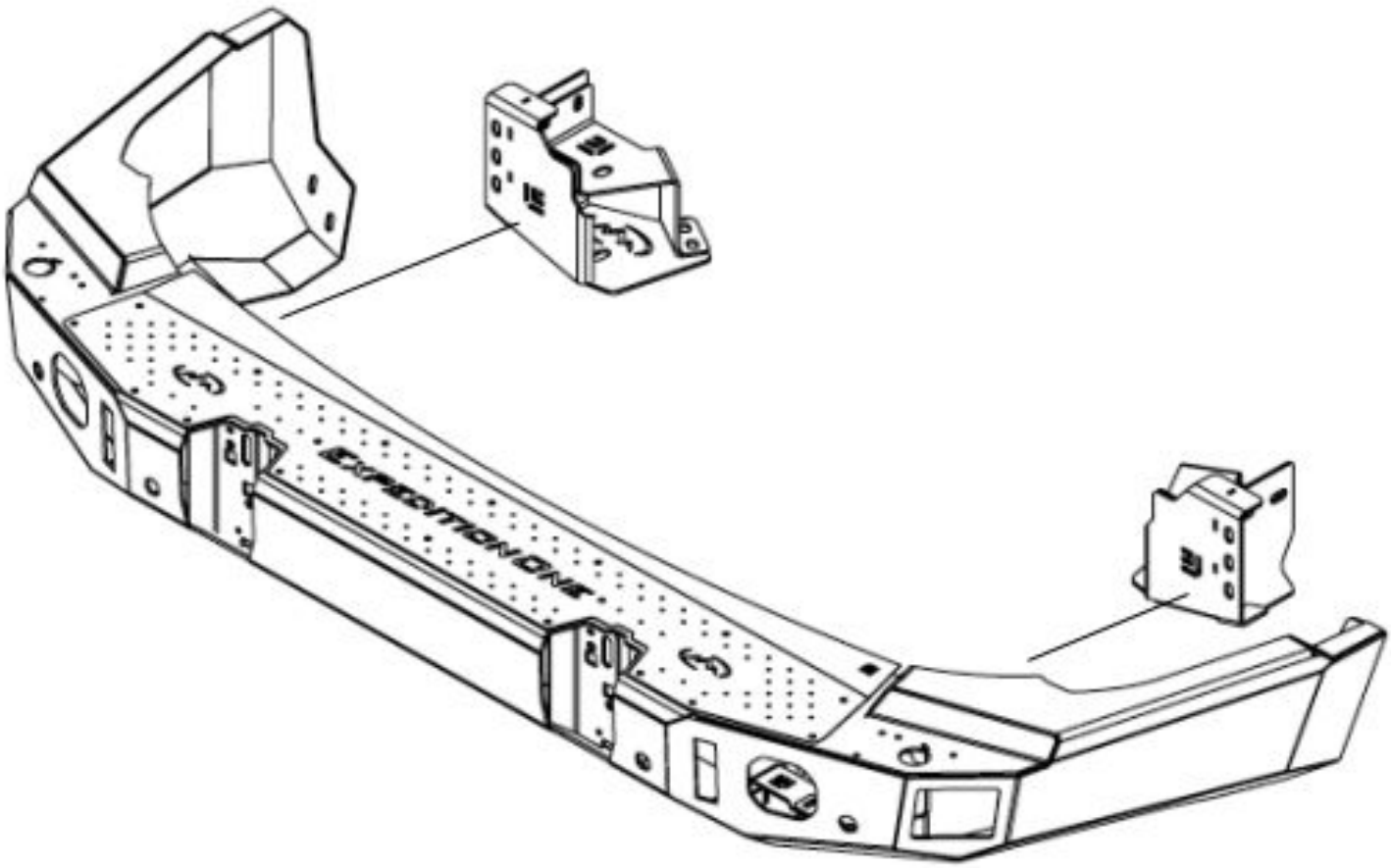

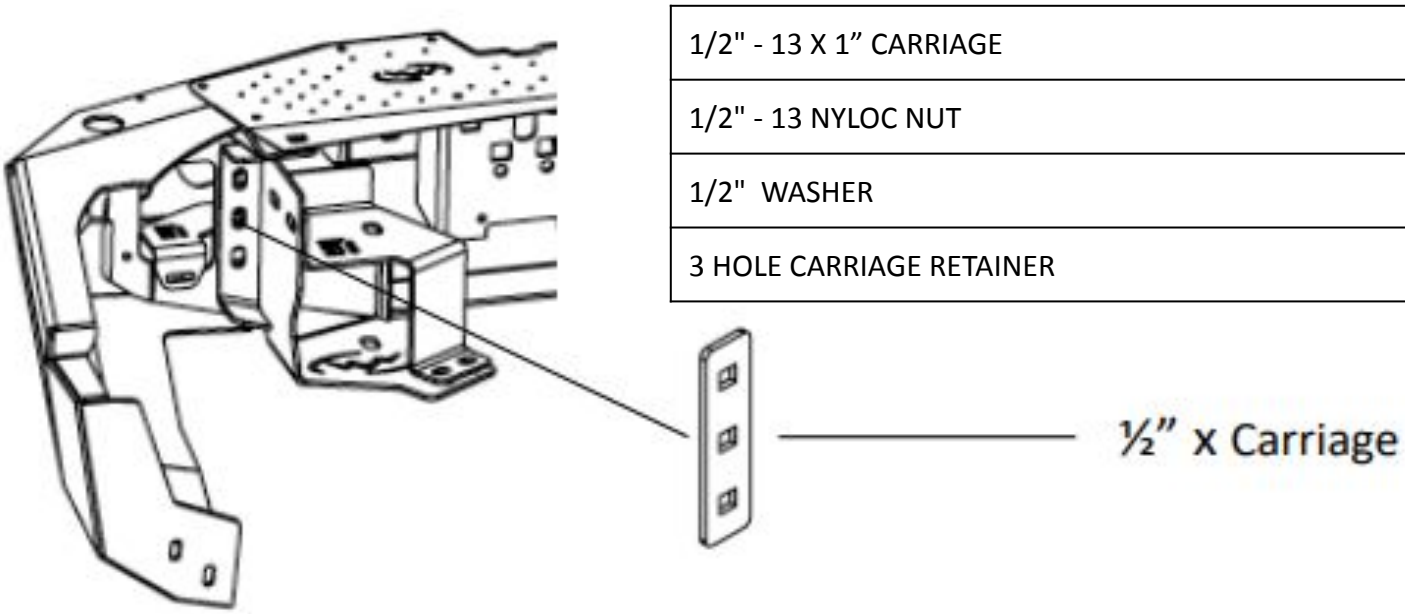

1/2" - 13 X 1” CARRIAGE	6
1/2" - 13 NYLOC NUT	6
1/2" WASHER	6
3 HOLE CARRIAGE RETAINER	2

7 – WING BRACKET INSTALLATION

Attach both mounting brackets as shown to the ends of the rear cross member. Mount using the provided 3/8” and 1/2” hardware. The outside bracket and the 1 1/4” hardware will need to be installed first. Use the provided bent retainer from the back side opening. Continue with mounting the inside bracket to the outside mount with 5 1/2” bolts and 1 1/2” hardware. Leave all hardware loose for adjustment and tighten once in place. + (plastic covers will need to be removed from the frame).

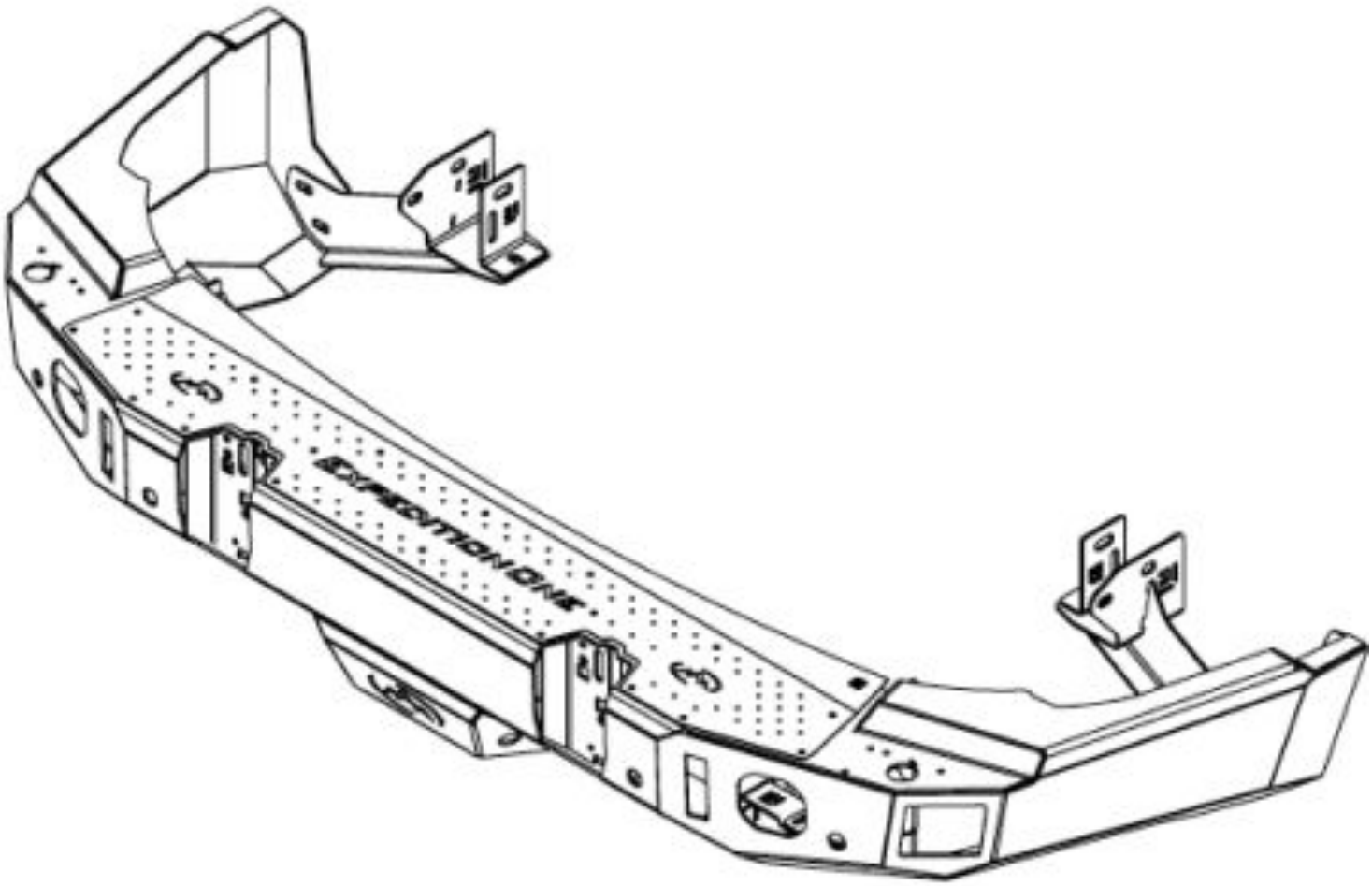



3/8" - 16 X 1" BUTTON HEAD	4
3/8" - 16 NYLOC NUT	4
3/8" WASHER	4
1/2" - 13 X 1-1/4" HEX CAP	2
1/2" - 13 X 1-1/2" HEX CAP	2
1/2" - 13 X 5 1/2" HEX CAP	2
1/2" - 13 NYLOC NUT	4
1/2" WASHER	10
BENT RETAINER NUT	2

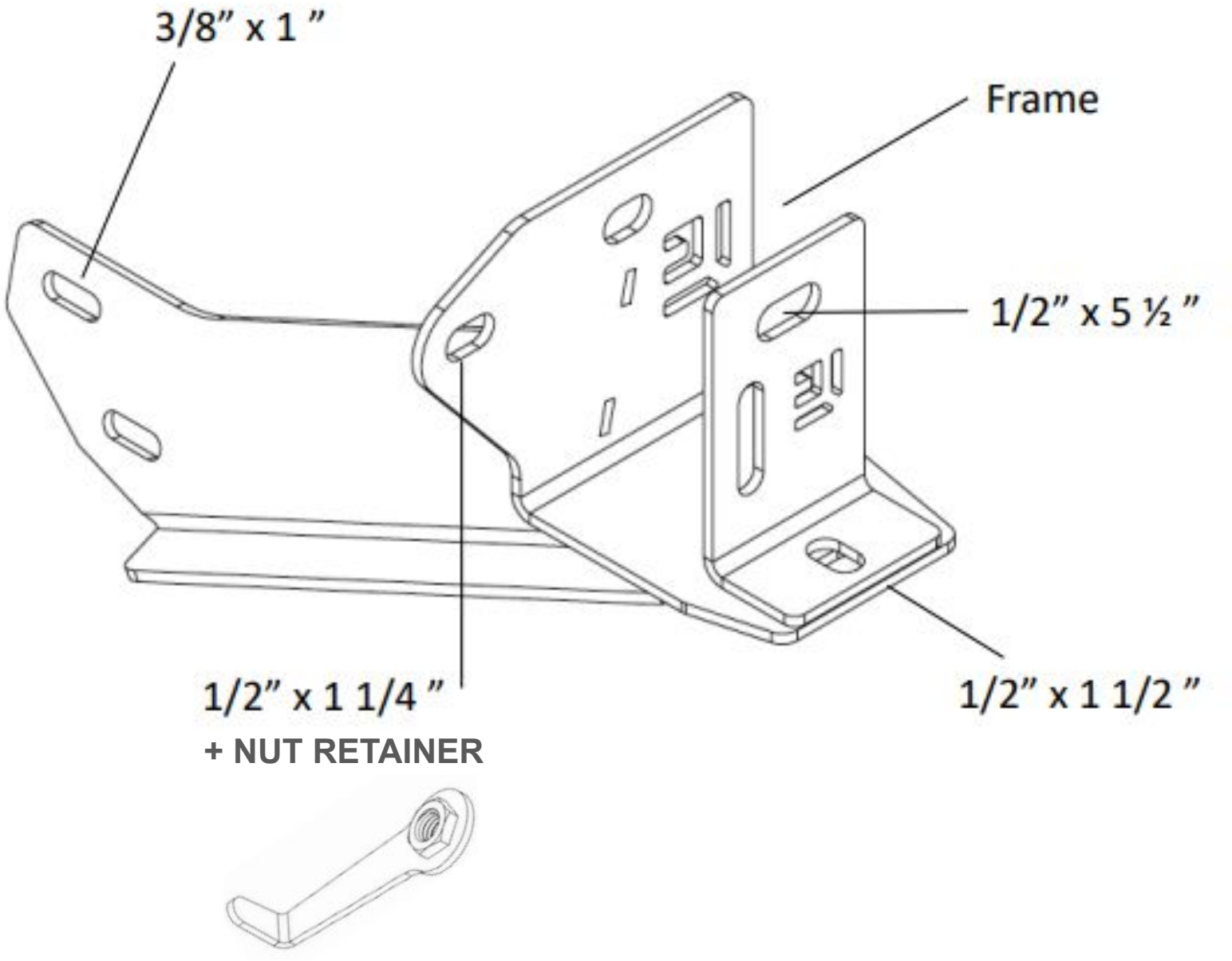

8 – TRAILER HITCH COVER

Attach 3/8”clip nuts to the bumper at the opening mount using the provide long hardware. Bracket will mount in front of the bumper, attach with long 3/8" button head bolts

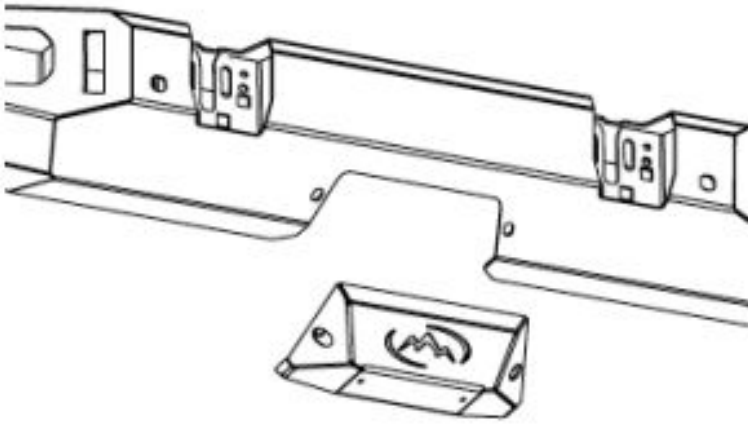

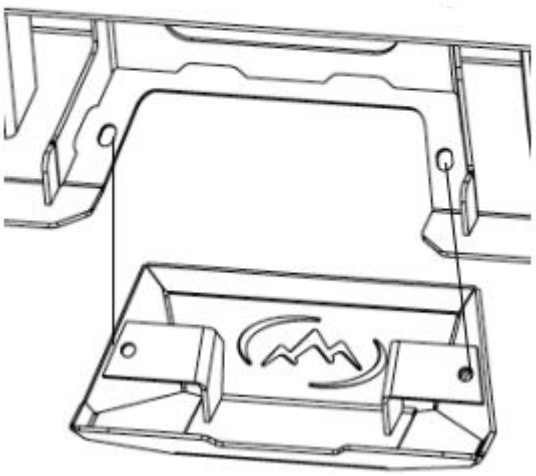

3/8" - 16 X 3" BUTTON HEAD	2
3/8" - 16 CLIP NUT	2

9 – LIGHT TABS

Mount the provided light tabs in the slotted opening using the provided 5/16” carriage bolts and hardware. Adjust as needed and tighten. (see light section for details)

5/16" - 18 X 1" CARRIAGE	2
5/16" - 18 NYLOC NUT	2
5/16" WASHER	2

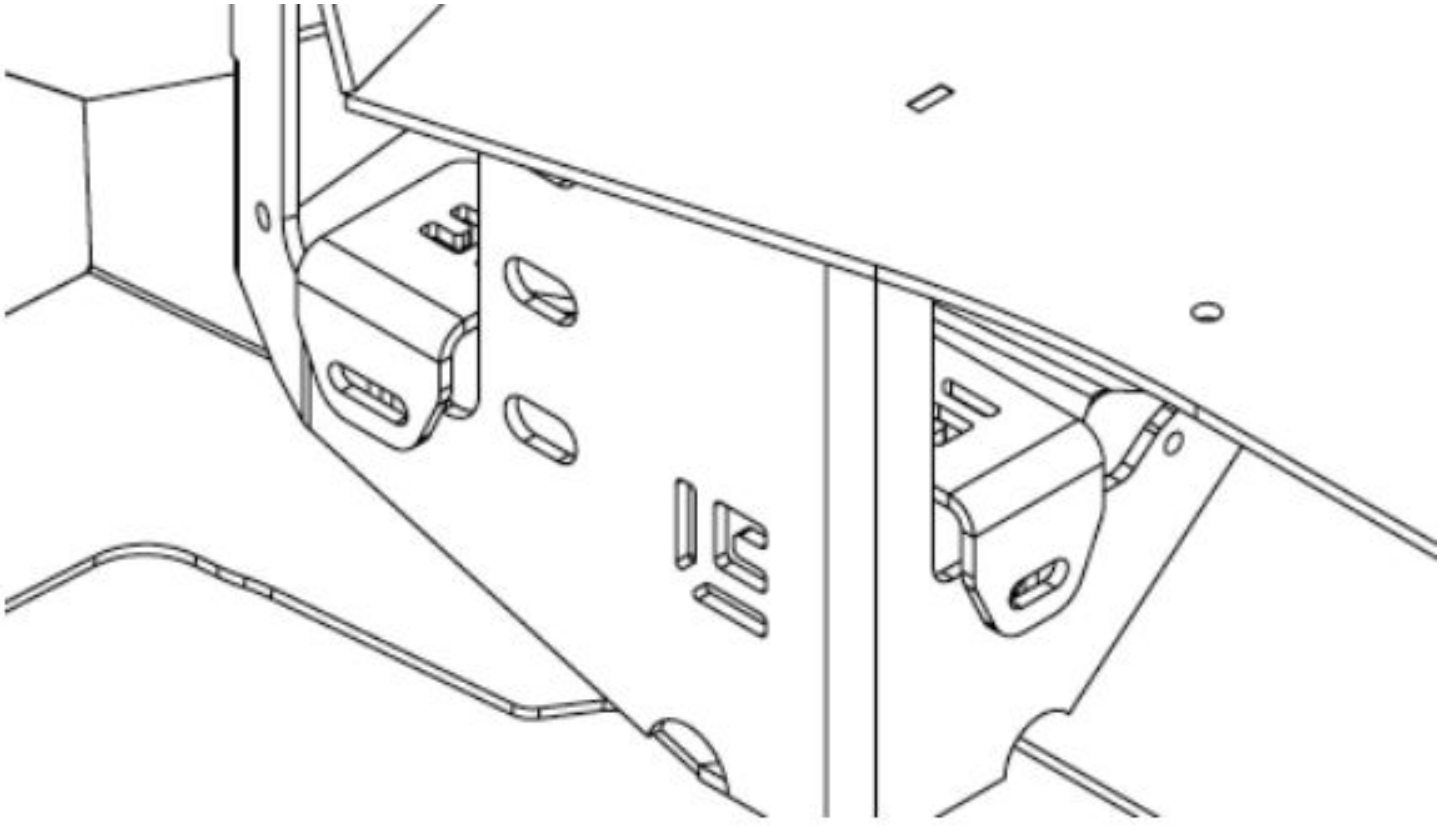

10 – TIGHTEN HARDWARE

Adjust the bumper to its desired location and TIGHTEN HARDWARE. Check that all hardware is tightened including all brackets and mounting locations. Reconnect the parking sensor wiring harness and other connections to the vehicles electronics and secure all loose wiring. Check that everything is working and adjust if needed before driving on the road.

TIGHTEN ALL HARDWARE AFTER EVERYTHING IS INSTALLED ON THE VEHICLE. CHECK AND RETIGHTEN ALL HARDWARE AFTER THE FIRST 100 MILES AND AFTER OFF ROADING. CHECK REGULARLY AFTER EXTENDED OFFROAD USE