EXPEDITION ONE
OFF-ROAD RESEARCH & EQUIPMENT

GX460 DUAL SWING CAMERA RELOCATION

PLEASE READ ENTIRE GUIDE BEFORE INSTALLATION

Recommended that you read this entire install guide before installation. Check that all hardware is present before staring or scheduling an install. This guide is supplemental to mechanical knowledge and ability. Anyone not familiar with automotive installation should seek professional installation.

INSTALL GUIDE

IMPORTANT INFO/FAQ

INSTALLATION HELP
Please review terms and conditions for details
Recommended purchaser review Welcome Guide at time of purchase for details

Care & Maintenance and Install Guides available at www.exp-one.com/resources

We do our best to offer timely assistance with your installation questions however as most of our team members are primarily engaged in the manufacturing process and packaging processes, we do not currently offer a tech for on-demand calls and inquiries. For the more technical installs or installs that are time-sensitive in nature, we would recommend our customers seek out the services of professional shops with experience specific to aftermarket bumpers.. We are happy to make recommendations to you on shops familiar with our products in your area. We do our best to respond to installation questions within 24-48 hours of contact as much as possible. Long-distance problem assessment can be difficult, so photos and videos are often required for us to best assist you. We highly recommend your initial contact regarding installation questions include both close-up and full photos, detailed descriptions using our part descriptions as much as possible, and video. This enables us to better assist without having the ability to see the install difficulties directly and assist you as quickly as possible.

NOTE
Expedition One does not guarantee fitment with other aftermarket products, or reinstallation of take off OEM parts.

Expedition One is NOT RESPONSIBLE for damage to paint or powder coating, items assembled in error during installation or costs associated with install, and injury.
OEM manufacture model refreshes/updates, factory build location and suppliers may cause variations in fitment or installation and can not be verified, vehicle to vehicle .

EXPEDITION ONE
113 N. 700 W. BUILDING 5C BAY 1
OGDEN, UT 84404
INFO@EXPEDITIONONE.BIZ
801-627-2921 MON-FRI 0900-1700 MST

INSTALL LEVEL ☆☆☆☆

1 STAR ★	EASY - No tools required
2 STARS ★★	BASIC - Requires standard tools, basic mechanical knowledge and understanding
3 STARS ★★★	MODERATE - Requires standard tools. Some drilling and/or cutting.
4 STARS ★★★★	ADVANCED - Requires speciality tools. Drilling, cutting, and grinding required
5 STARS ★★★★★	EXPERT - Professional installation recommended.

We always recommend professional assistance when installing our vehicle products. Always follow safety precautions including the use of safety gear and devices.

IMPORTANT INFO/FAQ

AFTERMARKET or OEM PRODUCTS

We DO NOT guarantee fitment or installation of any aftermarket, third party or OEM parts, accessories, or hardware. This includes items such as lighting, winches, skids, lifts, suspension, and accessory mounts. Access to all brands, manufactures and country of origin specific parts is limited or impossible during the product development stage and subsequent new or modified revisions of said products including OEM design changes or refreshes. It is recommended you have the product in hand and installed before modifying with other aftermarket parts. Consult other sources to gain any first hand knowledge of other products others have installed.

HARDWARE

Please review for details and installation. Figures or data may vary. Leave all accessible hardware loose for installation and tighten all hardware after everything is installed on the vehicle. Check and tighten all hardware after the first 100 miles and/or after off roading**.**

Some hardware locations do not require being tightened to spec due to there design, location or material attachment (including rubber, plastic, and aluminum). Over tightening may break or damage parts. Torque spec may vary, amounts listed are generic.

HARDWARE		TORQUE SPEC	
SIZE	SOCKET	GR5 / 8.8	GR8 / 10.9
#8	1/4"	X	
#10	5/16”		
1/4"	7/16”	6-8	9-10
5/16”	1/2"	13-14	18-20
3/8”	9/16”	23-26	33-37
7/16”	5/8”	37-41	52-58
1/2"	3/4"	57-64	80-90
M6	10MM	9-10	13-15
M8	13MM	22-24	32-35
M10	15MM	44-49	64-72



GRADE 5



CLASS 8.8

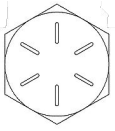

GRADE 8

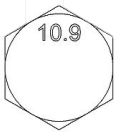

CLASS 10.9

NOTE

Extra hardware may be left over due to model or option specific items that may not be required for the install. OEM hardware may vary in style or socket size from shown.

TYPES OF HARDWARE		
		
HEX CAP BOLT	WASHER	NYLOC NUT
		
BUTTON HEAD BOLT	FENDER WASHER	HEX NUT
		
CARRIAGE BOLT	INTERNAL TOOTH	JAM NUT
		
SOCKET CAP BOLT	CLIP NUT	ACORN NUT
		
FLAT HEAD SCREW	RIVET NUT	COUPLING

TIGHTEN ALL HARDWARE AFTER EVERYTHING IS INSTALLED ON THE VEHICLE.CHECK REGULARLY

DOOR PLATE DIAGRAM

NOTE - Both the license plate panel and interior door trim will need to be removed - The internal door plate mounts behind the license plate panel as shown. Not inside of the door or the interior side of the vehicle.



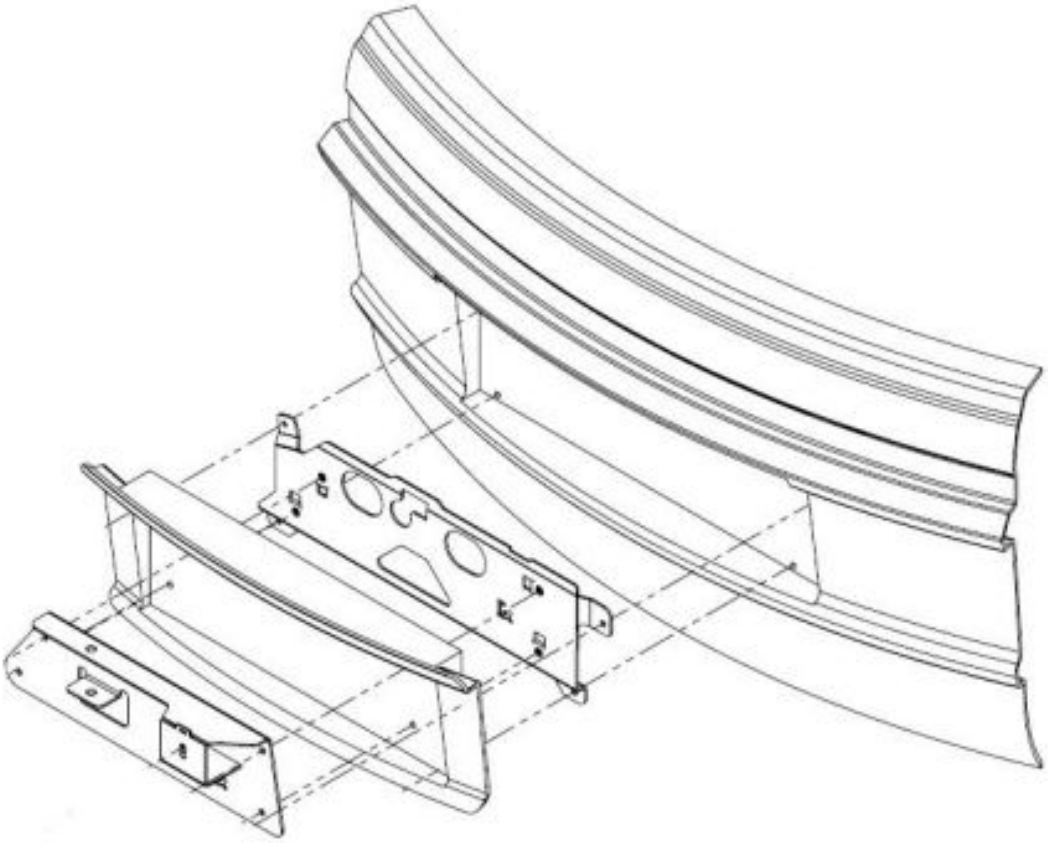

1 – DOOR TRIM REMOVAL

Remove the interior trim panel by removing the hardware behind the storage pockets and pulling the ends away from the door. Pull back the plastic cover to gain access to the hardware. Unbolt the hardware connecting the exterior door panel and handle as well as disconnecting wiring before removing.



Remove the center section .



Unclip the sides, pulling towards the door center



Hardware Locations



Hidden clip location





2 – DRILLING TEMPLATE

Start by taking the internal door plate and placing the template over the top - lining up the holes. Take the template and internal door plate and match them to the rear door license plate holes. With the internal door plate in place mark the locations (as circled). Drill the holes to flt 5/16” hardware and paint to prevent rust. The plates can be bolted together to help align the template.



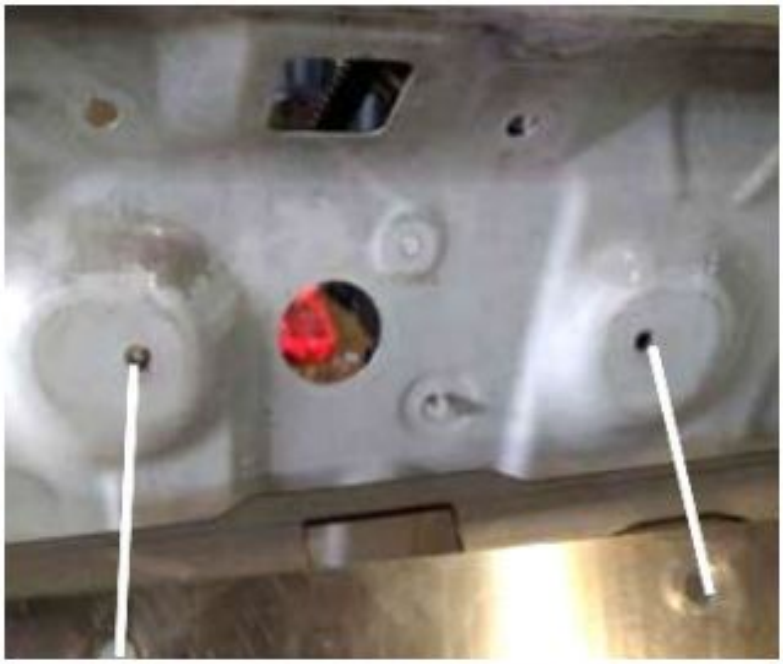





3 – INTERNAL MOUNTING

Attach the clip nut hardware into place and mount the internal door plate to the rear door using 5/16” hardware.

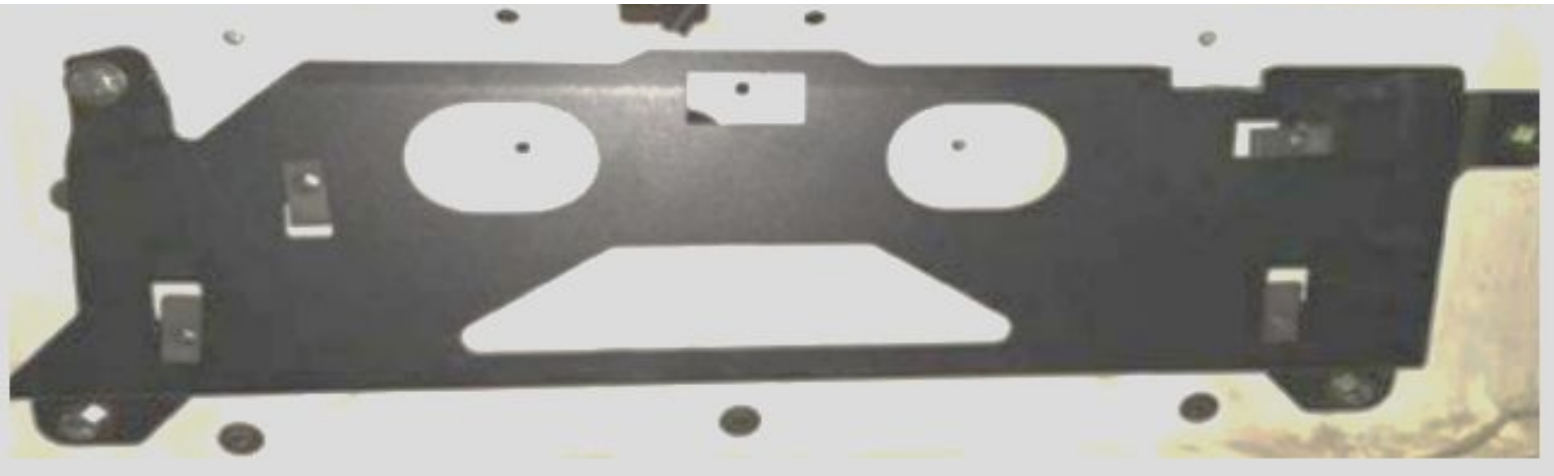

4 – CAMERA WIRING

With the camera installed extend the loom with the provided wiring kit, connect wire to wire. Use paired gel-filled splices provided in kit to extend the wiring harness. Provided wire is a solid wire and does not need to be stripped. Camera leads are a stranded wire and will work best with 1/4” stripped off the end. Cover with the provided loom and electrical tape as this partly will be exposed to the elements between the tire carrier and door. With the camera wires extended, thread the loom though the openings in the door and door plate as shown. Extend license plate lights at this time Connect all hardware and reinstall the door panels at this time.

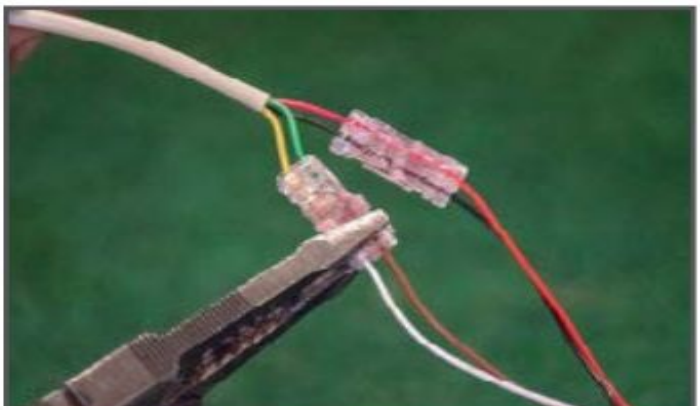







5 – INTERNAL MOUNTING

Align the door template with the license plates holes on the exterior door panel and mark the locations (as circled) for drilling holes to ft 5/16” hardware.

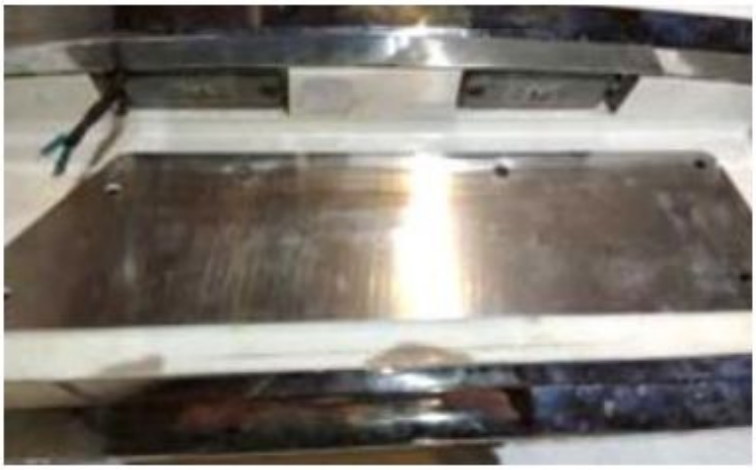

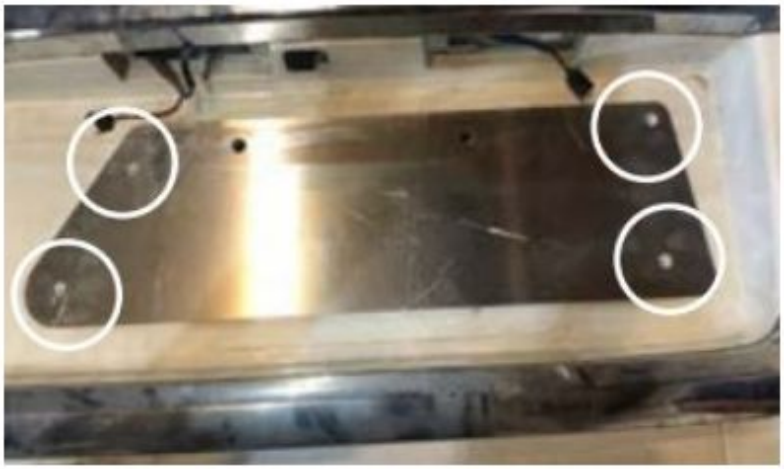

6 – DOOR PLATE

Align the door plate and mount as shown to the internal door plate

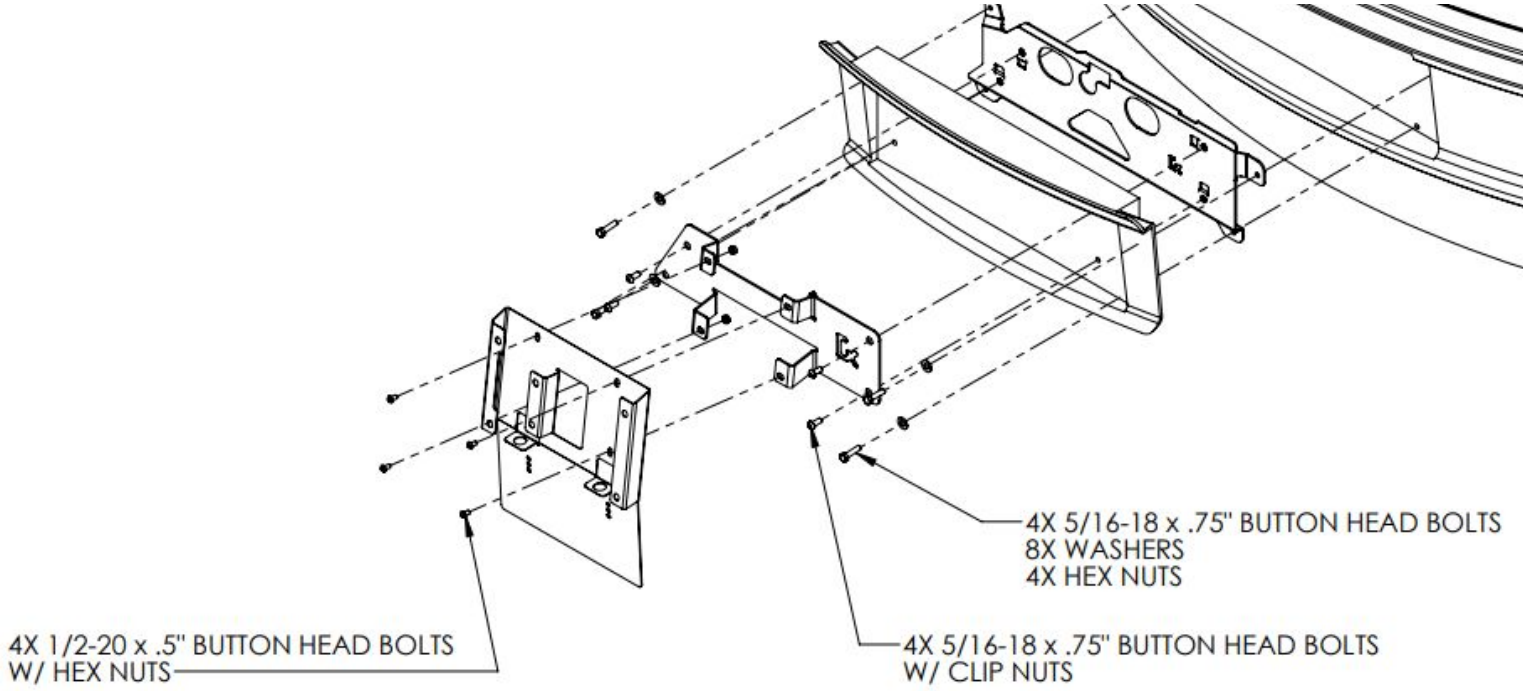

7 – LIGHT INSTALLATION

From here we'll position the new license plate leds that are provided in kit into their respective locations on the new door mount shown below



8 – EXTENSION COVER

Mount cover plate using ¼" hardware.



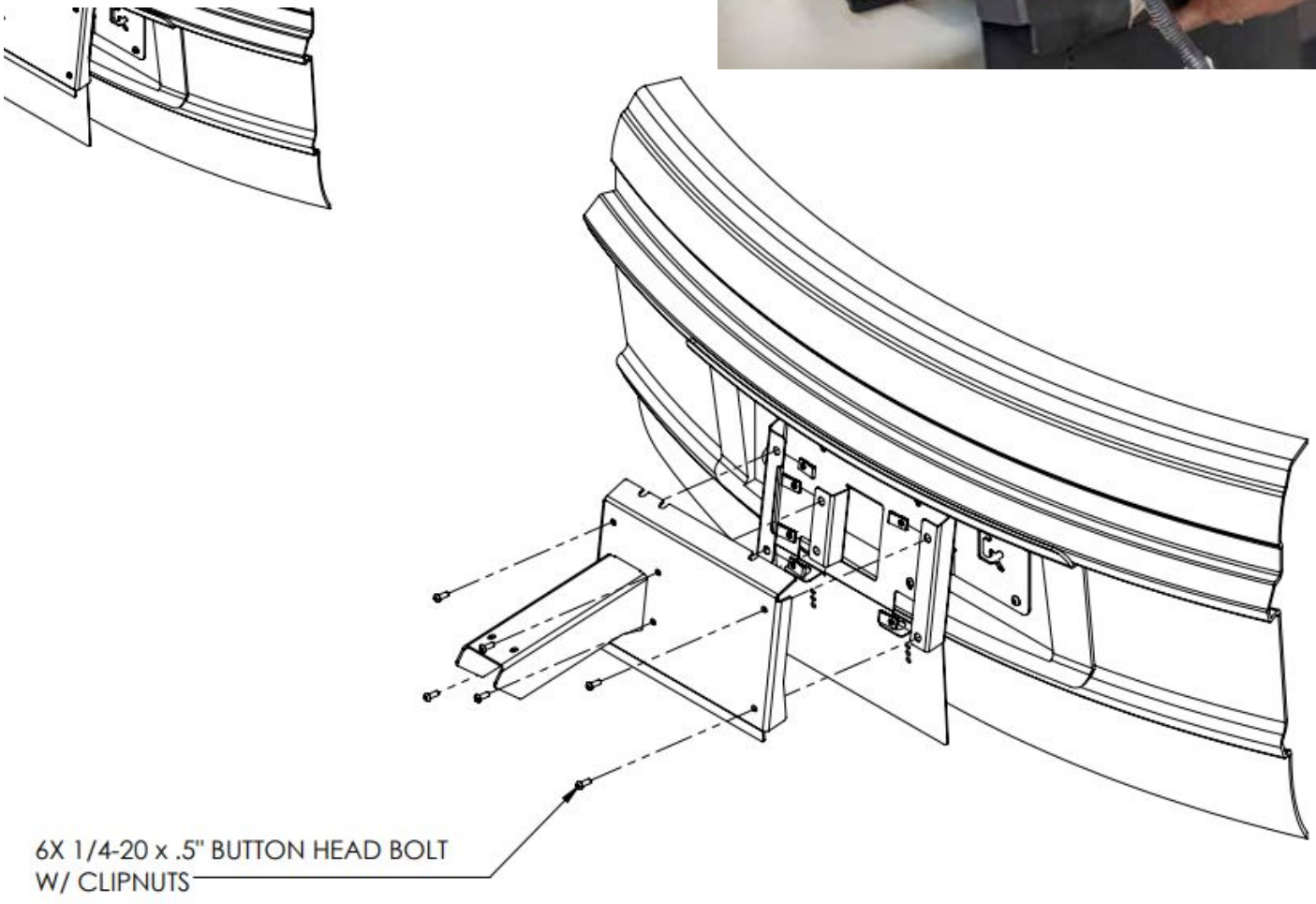

9 – LIGHT INSTALLATION

Install the camera into the provided mount and install into the extension cover. Check everything is working And adjust as needed. Reinstall all interior door panels and secure wiring.

